An investigation of the fluid-structure interaction in an oscillating-wing micro-hydropower generator

K.D. Jones, K. Lindsey & M.F. Platzer
Department of Aeronautics & Astronautics,
Naval Postgraduate School, USA.

Abstract

Results of a computational and experimental investigation of the fluid-structure phenomena occurring in an oscillating-wing micro-hydropower generator are presented. The generator consists of tandem wings which oscillate in a combined pitch-plunge mode with approximately 90 degree phase angle between the two motions. Two-dimensional inviscid and viscous flow codes are used to predict the oscillatory flow field and the power transferred from the water flow to the oscillating wings. Experimental results of water tunnel tests of this hydropower generator are also described and comparisons between the measured and predicted power output are given.

1 Introduction

The phenomenon of wing flutter is well known to aeronautical engineers. An aircraft wing with finite bending and torsional stiffnesses may experience catastrophic flutter under certain circumstances because the wing may absorb energy from the air flow. It follows that if an airfoil is mechanically coupled in pitch and plunge it can extract energy from the flow. It is feasible to construct an oscillating-wing power generator for the purpose of extracting useful power from a flow. In 1981, McKinney and DeLaurier [1] built such a device and called it a *wingmill*. They tested it in a wind tunnel and claimed that the wingmill achieved performance levels competitive with conventional windmills. Since their experiments, little computational or experimental work seems to have been done to further explore the potential of wingmills for power generation using either air or water

flows. Water-wingmills would appear to be environmentally more acceptable than conventional hydropowerplants, especially if they can be used in slow-flowing rivers where dams are not practical due to low terrain and ship traffic. Therefore, Jones *et al* [2] and Davids [3] started to analyze the performance potential of a wingmill using a single oscillating wing and performed a first series of water tunnel tests. They concluded that the use of a single wing has considerable disadvantages which might be overcome by the use of a tandem-wing arrangement. The work presented in this paper is an extension of this previous investigation to the case of a wingmill with oscillating tandem wings.

An airfoil which is capable of oscillating in both pitch and plunge with an arbitrary phase angle between the two motions can be described by the following equations:

$$\alpha(\tau) = \Delta\alpha \sin(k\tau + \phi) \tag{1}$$

and

$$z(\tau) = h \sin(k\tau) \ , \tag{2}$$

where τ is non-dimensional time, h is the non-dimensional plunge amplitude, $\Delta\alpha$ is the pitch amplitude, ϕ is the phase angle between the pitch and plunge, and k is the reduced frequency defined as

$$k = \frac{2\pi f c}{U_\infty} \ , \tag{3}$$

where c is the chord length of the airfoil, U_∞ is the freestream velocity, and f is the frequency of oscillation in Hz. Once the lift and moment have been computed as functions of τ, the power generated by the oscillating airfoil is obtained from the equation for the instantaneous non-dimensional power coefficient

$$C_p = C_l \dot{z} + C_m \dot{\alpha} \ , \tag{4}$$

where the $(\dot{\ })$'s indicate differentiation with respect to τ. The average power output is then given by

$$P = q_\infty U_\infty \overline{C_p} S \ , \tag{5}$$

where q_∞ is the freestream dynamic pressure and S is the wing area.

To quantify the power extraction efficiency, two measures are generally used. Clearly, the highest performance is achieved if all the energy is extracted from the flow, theoretically leaving the flow at a standstill behind the generator. Hence this performance can be measured by the ratio of the power extracted by the generator compared to the power available to the generator and is usually referred to as the total efficiency.

On the other other hand, if actuator disk theory is used to predict the highest efficiency which a wind mill may achieve because of the finite flow speed requirement downstream of the actuator disk the highest total efficiency is 16/27, the so-called Betz coefficient. For simplicity, in this paper the total efficiency measure is used.

2 The physics of power extraction by oscillating wings

2.1 Elementary theory

Consider an airfoil submerged in a water flow of velocity U_∞. The airfoil is capable of oscillating in two degrees of freedom, i.e., it may oscillate in both plunge (pure translation) and pitch, as shown in Fig. 1. Furthermore, there may be an arbitrary phase angle between the plunge and pitch motions. Two cases are illustrated in Fig. 1. The case of a 90 degree phase angle between pitch and plunge is shown in Fig. 1a. If, for simplicity, the airfoil is assumed to generate lift only if it has a non-zero angle-of-attack (AOA), then it is readily seen that the lift and the plunge velocity, $\dot{z}$, have the same sign, and thus according to the first term of eqn (4), power is extracted from the flow. On the other hand, if the airfoil moves with a zero phase angle, as shown in Fig. 1b, then the lift and plunge velocity are out of phase, such that power is extracted through half of the cycle, but power is required through the other half, with the end result that no net power is extracted over a full cycle. Hence, one might conclude that the phase angle between the pitch and plunge motions is the critical parameter which determines power generation.

Actually, the situation is somewhat more complicated than that. As shown by Jones and Platzer [4], another key parameter which may determine whether the airfoil extracts power from a flow is the effective angle of attack, as depicted in Fig. 2. The plunge motion creates an induced angle of attack given by

$$\alpha_i(\tau) = \arctan\left(\frac{hk\cos(k\tau)}{U_\infty}\right) . \tag{6}$$

The effective angle of attack is then approximated by

$$\alpha_e(\tau) \approx \alpha(\tau) - \alpha_i(\tau) . \tag{7}$$

The true effective AOA varies at different points on the airfoil surface and is dependent on the pitch axis location, but for relatively low frequencies, the above equation is sufficiently close. If the airfoil is pitched with a low amplitude while per-

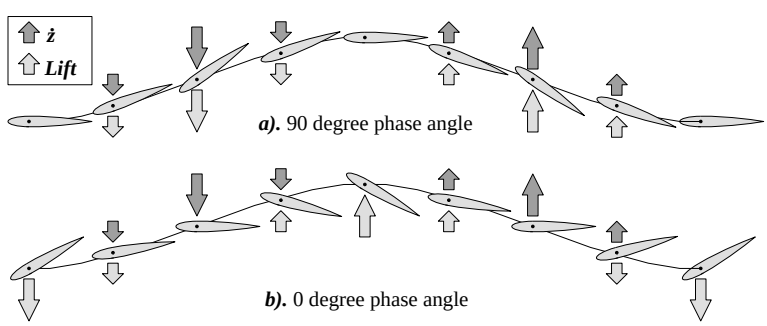

Figure 1: Effect of phase angle on power extraction.

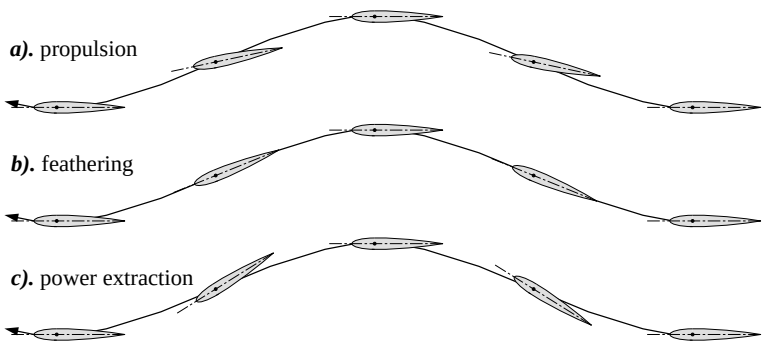

Figure 2: Effect of pitch amplitude on propulsion/power-extraction.

forming a plunge oscillation, with $\Delta\alpha < \arctan(hk)$, as shown in Fig. 2a, then thrust is generated. If the airfoil is pitched with a large amplitude, with $\Delta\alpha > \arctan(hk)$, as shown in Fig. 2c, then power is extracted. The intermediate case is shown in Fig. 2b, with $\Delta\alpha \approx \arctan(hk)$, where the airfoil is said to *feather* through the flow. This discussion has neglected the effect of the moment and pitch-rate, which may contribute significantly to the net power input/output. In most situations, the moment detracts from the overall performance, as work must be done to change the AOA at the top and bottom of the stroke. However, as will be shown in a later section, with proper tuning, this work can be minimized or, in some cases, may even generate additional power.

2.2 Incompressible two-dimensional flow analysis

The above elementary considerations can be put on a firmer basis using an inviscid incompressible flow analysis based on a panel code developed at the Naval Postgraduate School [5]. It is well known that quasi-steady aerodynamic concepts, as used in the elementary theory, become increasingly inaccurate as the frequency of the airfoil oscillation increases. This is due to the fact that any change in lift causes the shedding of a vortex from the airfoil trailing edge and, therefore, the effect of the vortex wake shed from the oscillating airfoil has to be accounted for. Using the aforementioned panel code Jones and Platzer [4] performed an extensive exploration of the four-dimensional parameter space given by the pitch and plunge amplitudes, the frequency of oscillation, and the phase angle between the pitch and plunge oscillations. These computations confirmed that power extraction occurs if the phase angle between pitch and plunge is approximately 90 degrees and if $\Delta\alpha > \arctan(hk)$.

Our most recent analysis was therefore directed at finding the parameter combinations which maximize the power extraction or optimize the power extraction efficiency. For a description of the code we refer to reference [5]. Suffice it to say here that the code enables incompressible inviscid flow solutions for airfoils of arbitrary thickness and camber executing pitch and plunge oscillations with

arbitrary amplitude and frequency. Hence the only limitation on the results is the omission of viscous and separated flow effects. These effects will be discussed in the next section.

As already mentioned, power extraction occurs for phase angles at or near 90 degrees. Therefore, the sensitivity of power extraction and efficiency to changes in phase angle is of considerable interest. In Fig. 3, lines of constant power coefficient (left side) and total efficiency (right side) are shown for a NACA 0014 airfoil (which resembles the experimental apparatus discussed in a later section) which operates with a maximum effective AOA of about 15 degrees and pitches about the 25% chord point. The power and efficiency are plotted as functions of reduced frequency and plunge amplitude, and graphs are shown for ϕ=80, 90, 100 and 110 degrees. It is seen that the peak power extracted from the flow shifts from relatively low reduced frequencies (approximately 0.5) and high plunge amplitudes (approximately 5) at a phase angle of 80 degrees to relatively high reduced frequencies (approximately 1.4) and low plunge amplitudes (approximately 1.25) at phase angles of 110 degrees. On the other hand, the peak total efficiency remains fairly constant at the low plunge amplitudes and high frequencies for the whole phase angle range considered.

Another important parameter is the effective AOA. As expected, the panel code predicts that both the power and efficiency increase with increasing effective AOA.

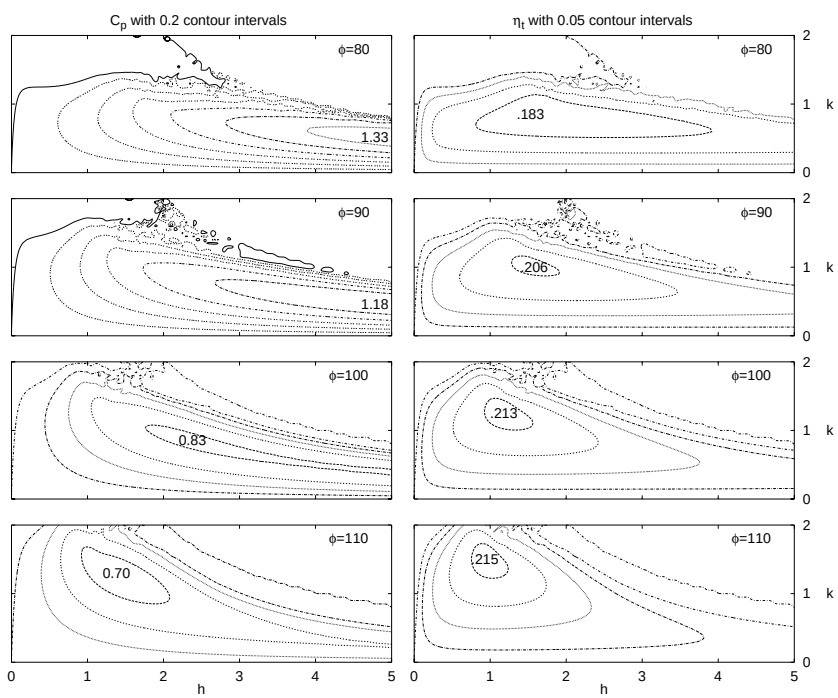

Figure 3: Power and efficiency predicted by the panel code.

However, these findings are based on attached flow computations and, therefore, the question arises as to the range of validity of an inviscid flow analysis.

2.3 Viscous flow analysis

In order to predict the effects of flow separation, a two-dimensional Navier-Stokes solver is used. Simulations are run at a high Reynolds number (10^6), assuming fully turbulent flow, as one might expect for a fairly large scale device placed in a river, and at a low Reynolds number (2×10^4), assuming laminar flow, comparable to the conditions in the water tunnel. While the panel code solutions are quite inexpensive (Fig. 3 is a compilation of more than 16,000 simulations, requiring a total of about 40 hours on a PC), the Navier-Stokes solver is much more costly (a single solution requires about 20 hours on a PC) and, therefore, fewer solutions are computed.

In order to mimic the experimental methodology, the pitch and plunge amplitudes, the phase and the pitch axis are all fixed, and simulations are run for a range of frequencies. The power coefficient predicted at high and low Reynolds numbers are compared to the panel code predictions in Fig. 4, for the NACA 0014 airfoil pitching about 0.25c with an amplitude of about 73 degrees, a plunge amplitude of about 1.3c, and a phase angle of 90 degrees. The Navier-Stokes results include vertical error bars which indicate the standard deviation of the power over the last 3 cycles of the calculations. Of particular interest is the fact that the Navier-Stokes solver, in the presence of massive separation, predicts a considerably higher power coefficient over most of the frequency range. This indicates that separation does not hinder the performance. In fact, to the contrary, the development and convection of a large dynamic stall vortex (DSV) is critical to the high power generation. By viewing the flowfield at discrete intervals through the cycle, it is seen that at the frequency where peak power occurs ($k \approx 0.65$) the DSV stays attached to the upper surface, and convects to the trailing edge at about the same time that the air-

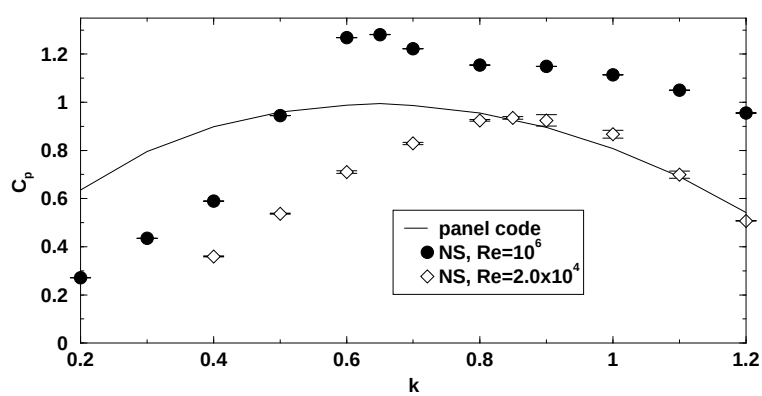

Figure 4: Power predicted by the panel and Navier-Stokes codes.

foil reaches top/bottom dead center, at which time the airfoil must rapidly change AOA. The suction provided by the DSV aids in this AOA change, and therefore increases the overall performance. The flowfields predicted by the panel code and the Navier-Stokes solver are shown in Fig. 5 for $k = 0.6$ at mid-stroke (left side) and at the point in the cycle where the DSV just reaches the trailing edge (≈ 160 degrees through the cycle). At lower frequencies the DSV detaches from the suction surface, and the performance plummets. At higher frequencies the DSV does not arrive at the trailing edge in time to help with the rapid AOA change, and the beneficial effect it has on pitching is diminished. Note the much lower performance at the low Reynolds number. Also note that at the low Reynolds number the DSV develops more quickly and, therefore, the frequency for optimal performance is much higher. Even at mid-stroke, the low Reynolds number simulation predicts a well developed DSV as well as a trailing-edge separation vortex, and at the later point in the cycle the DSV has separated from the airfoil.

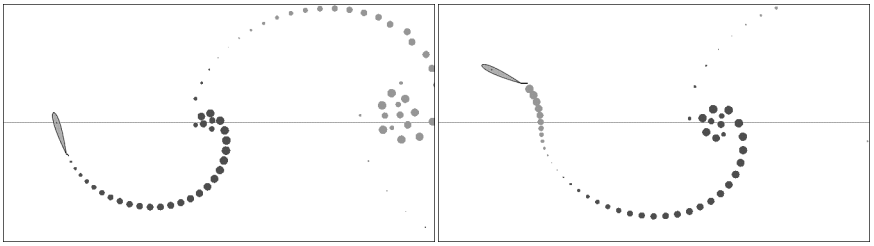

a). panel code

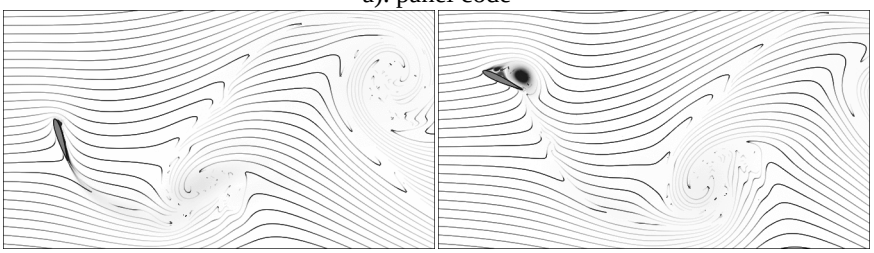

b). Navier-Stokes - Reynolds number 10^6

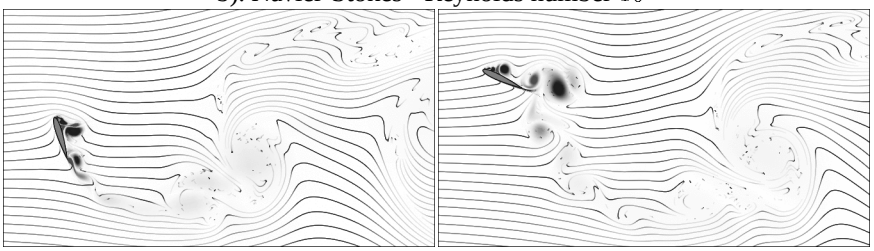

c). Navier-Stokes - Reynolds number 2×10^4

Figure 5: Flowfield computed by the solvers.

3 The oscillating-wing hydropower generator

The experimental model employs two wings in a tandem arrangement, as depicted in Figs. 6 and 7. The two wings have a streamwise separation of 9.6c, and operate with a 90 degree phase difference, such that the null spot of one coincides with the power stroke of the other. Discrete pitch and plunge amplitudes and pivot locations are possible, and the phase between pitch and plunge may be varied continually during operation. The airfoil section resembles a NACA 0014, with a chord length of 2.5 inches and a half-span of 6.75 inches. Each wing assembly has two of these wing sections, separated by about an inch in the middle and about 0.25 inch clearance with the side walls, as shown in Fig. 7. Plunge amplitudes of up to 1.4c, and pitch amplitudes of up to about 90 degrees are possible. The model uses a Prony brake to extract power from the device.

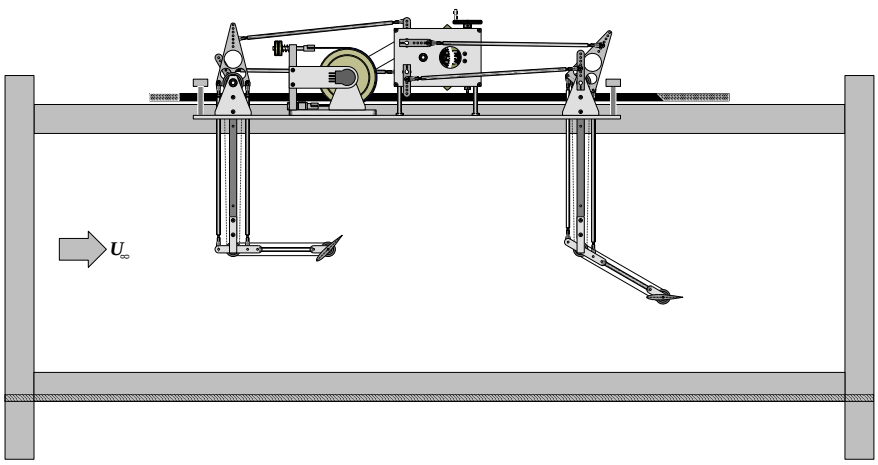

Figure 6: Side view of the model installed in the water tunnel.

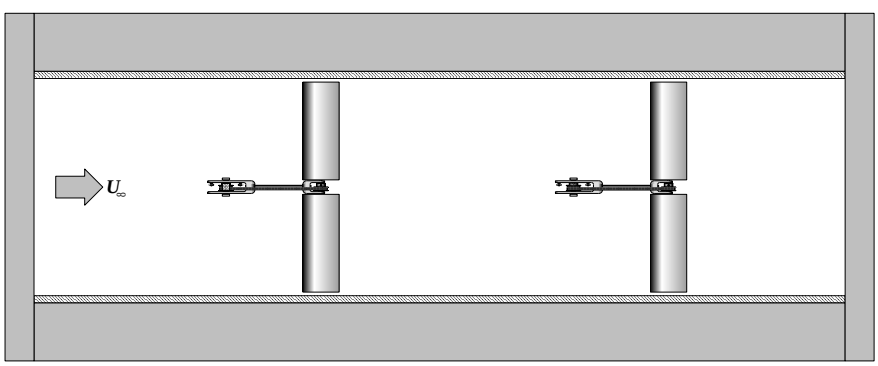

Figure 7: Top view of the underwater components.

4 Water tunnel test of the hydropower generator

The oscillating-wing hydropower generator was tested in the water tunnel of the Naval Postgraduate School Department of Aeronautics and Astronautics. The tunnel is a horizontal closed circuit continuous flow tunnel built by the Eidetics Corporation, capable of water velocities up to about 16 inches per second. The test section is 15 inches wide, 56 inches long, and 20 inches deep. At the maximum tunnel speed the Reynolds number achieved was about 2.2×10^4. An attempt was made to visualize the flow through the power generator by injecting dye into the water upstream of the first wing. However, at 16 inches per second the rake shed a vortex street which quickly dissipated the dye making it impossible to obtain good visual flow information. Therefore, the tests were limited to obtaining measurements of the extracted power. This was accomplished by adjusting the preload tension on the Prony brake, allowing the model to operate from no-load (just overcoming friction and mechanical losses) up to the point of stall.

Data acquisition was performed using a load-cell on the Prony brake to measure torque, and a rotary encoder to determine the rotational speed. Signals from both devices were recorded on a digital storage oscilloscope (DSO) generally for a 16 second period. Post-processing of the two signals yielded average power and frequency and the associated deviations.

5 Comparison of numerical and experimental results

A typical set of experimental data is shown in Fig. 8, plotting the power coefficient as a function of the reduced frequency. The predictions of the Navier-Stokes solver are included, and while the general trend is comparable, the magnitude of the experimental data is considerably less than the value predicted by the Navier-Stokes solver. There are many known contributors to this difference. The numerical model neglects mechanical friction, the acceleration of mechanical mass and the added mass for the submerged components, buoyancy and three-dimensional losses at the wing tips and the gap between wing sections. Additionally, the experimental wing sections are made of painted wood, and over time water was absorbed into the wood causing rather severe surface defects. Also, the trailing wing operates in the wake of the leading wing, and therefore has less energy to draw from. This tandem interference effect is not modeled in the numerics. A more detailed description of the numerical analyses and of the water tunnel test are given by Lindsey [6].

6 Summary

The water tunnel tests demonstrated the feasibility of power extraction from water flows at speeds as low as 16 inches per second by means of tandem wings which oscillate in a combined pitch/plunge mode with a 90 degree phase angle between the two motions. This fluid-structure interaction phenomenon was analyzed with

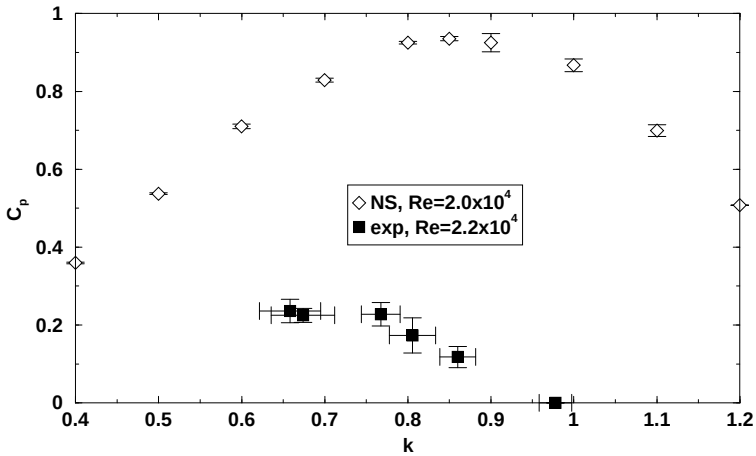

Figure 8: Comparison of numerical and experimental results.

two-dimensional panel and Navier-Stokes codes. These analyses predicted a much greater power extraction capability than was achieved in this first series of tests. Therefore, it is concluded that this type of power generator has significant further development potential.

References

[1] McKinney, W. & DeLaurier, J., The Wingmill: An Oscillating-Wing Windmill. *Journal of Energy*, **5**, No. 2, pp. 109-115, 1981.

[2] Jones, K.D., Davids, S.T. & Platzer, M.F., Oscillating-Wing Power Generation. *Proceedings of the 3rd ASME/JSME Joint Fluids Engineering Conference*, July. 1999.

[3] Davids, S.T., A Computational and Experimental Investigation of a Flutter Generator. Master's Thesis, Department of Aeronautics & Astronautics, Naval Postgraduate School, June 1999.

[4] Jones, K.D. & Platzer, M.F., Numerical Computation of Flapping-Wing Propulsion and Power Extraction. *AIAA Paper No. 97-0826*, Jan. 1997.

[5] Teng, N.H., The Development of a Computer Code for the Numerical Solution of Unsteady, Inviscid and Incompressible Flow Over an Airfoil. Master's Thesis, Department of Aeronautics & Astronautics, Naval Postgraduate School, June 1987.

[6] Lindsey, K, A Feasibility Study of Oscillating-Wing Power Generators. Master's Thesis, Department of Aeronautics & Astronautics, Naval Postgraduate School, Sept. 2002.